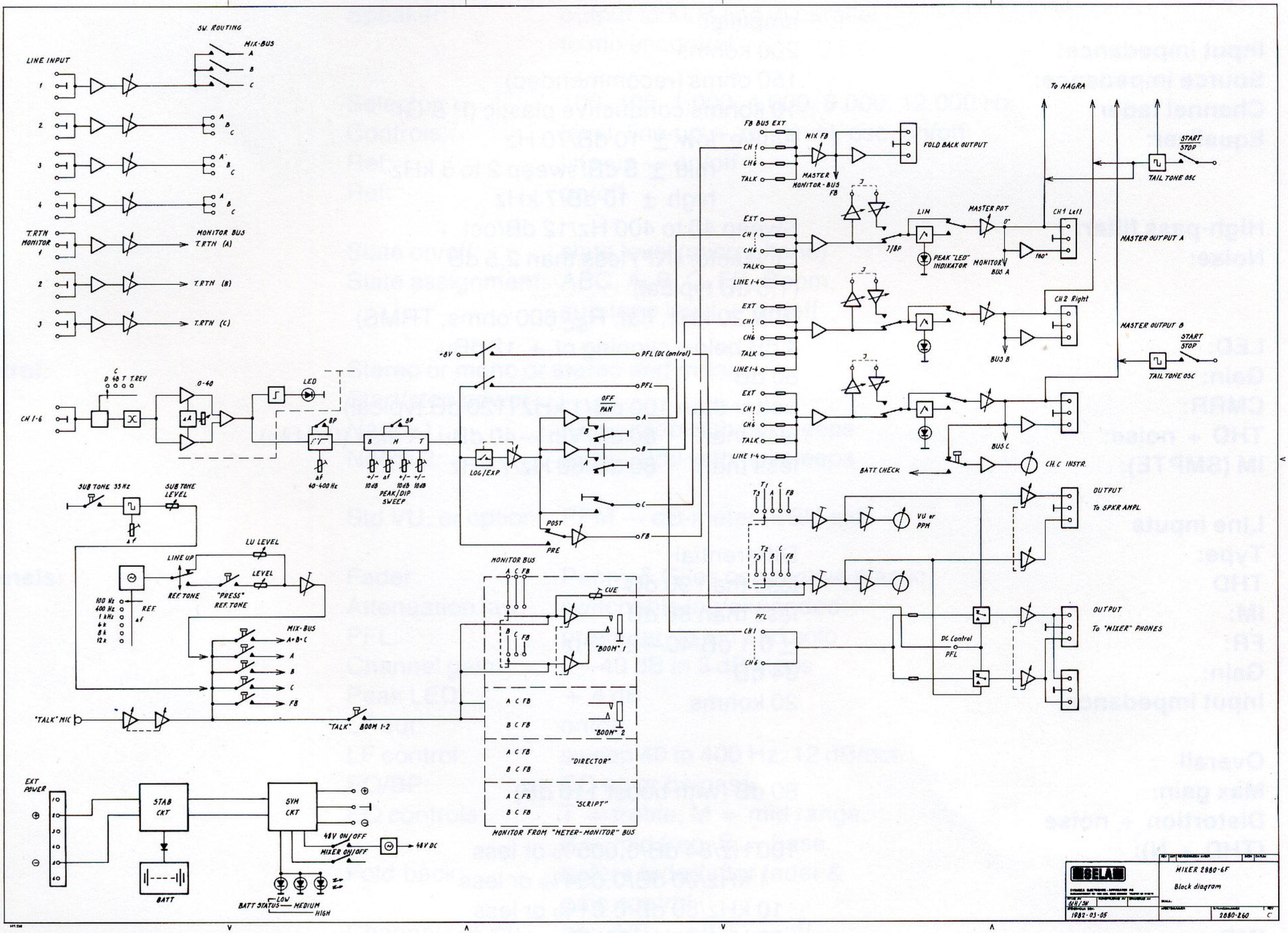
SW. ROUTING
MIX-BUS
LINE INPUT
T.RTN MONITOR
MONITOR BUS
T.RTN (A)
T.RTN (B)
T.RTN (C)
CH 1-6
0 48 T T.REV
0-40
LED
BP
Δf 40-400 Hz
B M T
+/- Δf +/- +/-
10dB 10dB 10dB
PEAK/DIP SWEEP
LOG/EXP
+8V
PFL (DC control)
PFL
OFF PAN
POST
PRE
SUB TONE 35 Hz
SUB TONE LEVEL
LU LEVEL
LINE UP
LEVEL
REF. TONE
"PRESS" REF. TONE
100 Hz
400 Hz
1 kHz
4 k
8 k
12 k
REF
MIX-BUS
A+B+C
"TALK" MIC
"TALK" BOOM 1-2
MONITOR BUS
CUE
"BOOM" 1
"BOOM" 2
"DIRECTOR"
"SCRIPT"
MONITOR FROM "METER-MONITOR" BUS
EXT POWER
STAB CKT
SYM CKT
BATT
48V ON/OFF
MIXER ON/OFF
48V DC
BATT STATUS
LOW
MEDIUM
HIGH
FB BUS EXT
CH 1
CH 6
TALK
MIX FB
MASTER MONITOR-BUS FB
FOLD BACK OUTPUT
To NAGRA
START STOP
TAIL TONE OSC
EXT
LINE 1-4
LIM
MASTER POT
0°
180°
J/BP
PEAK "LED" INDIKATOR
MONITOR BUS A
CH 1 Left
MASTER OUTPUT A
CH 2 Right
BUS B
MASTER OUTPUT B
BUS C
CH. C INSTR.
BATT CHECK
VU or PPM
OUTPUT
To SPKR AMPL.
To "MIXER" PHONES
DC Control
PFL
SELA
MIXER 2880-6F
Black diagram
GH/SW
1982-05-05
2880-260
C